Record and Play

Recording Videos
1 Press record button to start/stop.
2 Press up/down buttons to zoom in/out.

Playing Videos
3 Press play button to start/pause.
4 Press left/right buttons to view previous/next.
Tip: Hold left/right buttons during playback to rewind/fast-forward.

Deleting Videos
5 Press delete button. Select YES to confirm.
Tip: Delete button is locked when you first power on. To unlock, press and hold delete button.

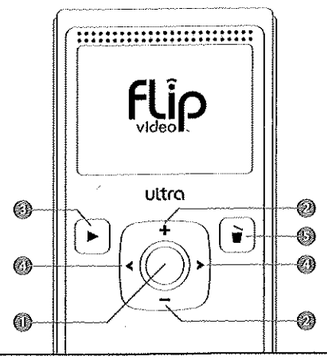

Connect to Computer

1 Slide USB latch down. USB arm flips up automatically.

2 Plug arm into USB port on computer.

3 You can install FlipShare software on your computer. If you are using the Flip Ultra Rechargeable Battery Pack, it will begin recharging.

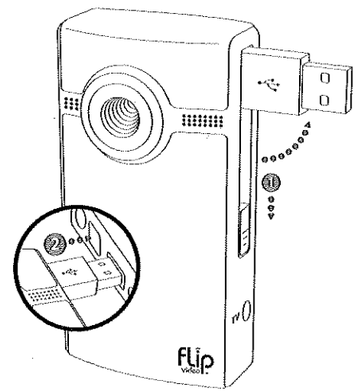

Save, Edit, and Share

flipshare

FlipShare is built-in software that makes organizing, editing, and sharing video incredibly simple. When you plug in your camcorder, open FLIPVIDEO and launch Setup FlipShare (PC) or Start FlipShare (Mac).

FlipShare Features
- Browse, play, and delete your videos
- Save your videos to your computer
- Make custom movies with music
- Snap photos from your videos
- Share your videos online or by email
- Upload to MySpace™, YouTube™, and others

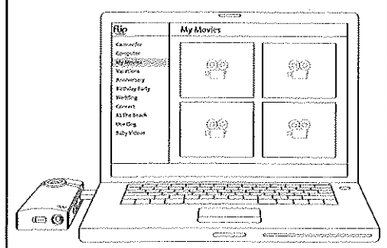

Click HELP inside FlipShare for detailed instructions on all features.

View On Television

1 Power off camcorder and television.

2 Connect camcorder to television with included TV connection cable.

3 Power on camcorder and television.
- Camcorder screen turns off when connected to television.

4 Switch your television to VIDEO input.
- See television manual for instructions.

5 Press play button to start/pause playback.

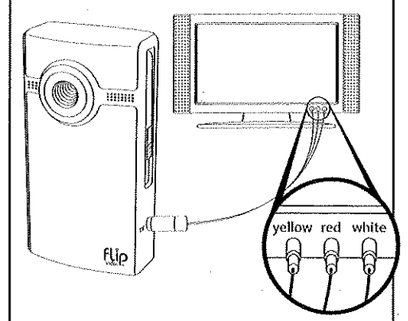

Included In This Box

- Flip Video Camcorder
- Two AA Batteries
- TV Cable
- Wrist Strap
- Soft Case
- Quickstart Guide
- Warranty/Safety Info

Flip Video Support

Registration and Support
Go to www.theflip.com/support

Declaration of Conformity

Responsible Party:
Pure Digital Technologies, Inc.
30 Maiden Lane, 6th Floor
San Francisco, CA 94108 USA

pure digital TECHNOLOGIES

FCC Compliance Statement
This device complies with part 15 of the FCC Rules. Operation is subject to the following two conditions: (1) this device may not cause harmful interference, and (2) this device must accept any interference received, including interference that may cause undesired operation.

Radio and TV Interference
This equipment has been tested and found to comply with the limits for a Class B digital device in accordance with the specifications in Part 15 of FCC rules. These specifications are designed to provide reasonable protection against harmful interference in a residential installation. This equipment generates, uses, and can radiate radio frequency energy and, if not installed and used in accordance with the manufacturer's instructions, may cause harmful interference to radio communications.

However, there is no guarantee that interference will occur in a particular installation. If this equipment does cause harmful interference to radio or television reception, which can be determined by turning the equipment off and on, the user is encouraged to try to correct the interference by one or more of the following measures:

- Reorient or relocate the receiving antenna.
- Increase the separation between the equipment and the receiver.
- Connect the equipment into an outlet on a circuit different from that to which the receiver is connected.
- Consult the dealer or an experienced radio/television technician for help.

The supplied interface cable must be used with the equipment in order to comply with the limits for a digital device pursuant to Subpart B of Part 15 of FCC Rules.

CAUTION: Changes or modifications to this device not authorized by Pure Digital Technologies, Inc. may void the user's authority to operate this device.

Canadian ICES-003 Statement: This Class B digital apparatus complies with Canadian ICES 003.

© 2002-2009 Pure Digital Technologies, Inc. All rights reserved. The FLIP VIDEO logo, PURE DIGITAL, FLIP, FLIP VIDEO, and FLIP ULTRA are all trademarks of Pure Digital Technologies, Inc. All other trademarks are the property of their respective owners. Designed by Pure Digital Technologies, Inc., in the USA. Made in China. For more information, please visit www.theflip.com.

flip video

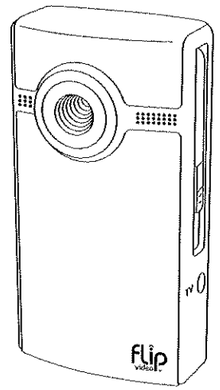

ultra

QUICKSTART GUIDE

Consult Safety Instructions Before Use.

Install Batteries

Welcome to Flip Video Ultra™

1 Slide battery latch to unlock.
2 Slide front panel down.
3 Insert batteries.

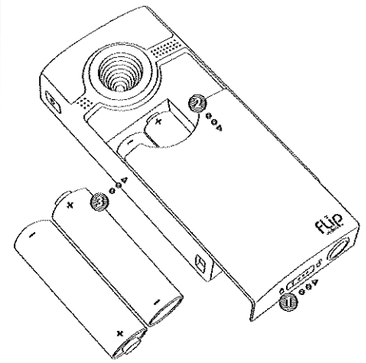

Optional Ultra Rechargeable Battery Pack

For your convenience, this camcorder works with standard AA batteries as well as the optional Flip Ultra Rechargeable Battery Pack. Learn more at www.theflip.com/accessories.

Get Started

1 Press power button to turn on. Camcorder setup appears automatically when you first power on.

Setting Language

- Use + and − to select your language.

Setting Date

- Use + and − to adjust the current setting.
- Use < and > to select month/day/year.

Setting Time

- Use + and − to adjust the current setting.
- Use < and > to select hour/minute/AM/PM.

Turning Off Tones

- Use < and > to toggle the tones on and off.

Turning Off Recording Light

- Use < and > to toggle the recording light on and off.

To Return to Camcorder Setup Later

Starting with the camcorder off:

1 Press power button to turn on.
2 When Flip Video logo appears, press and hold record button until SET DATE appears.

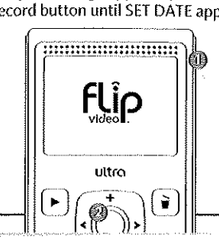

Camcorder Features

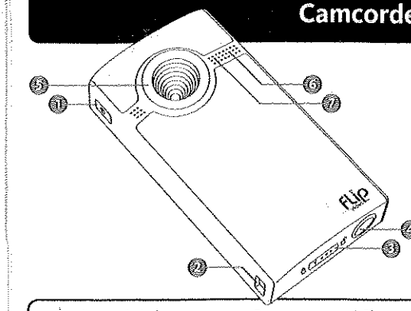

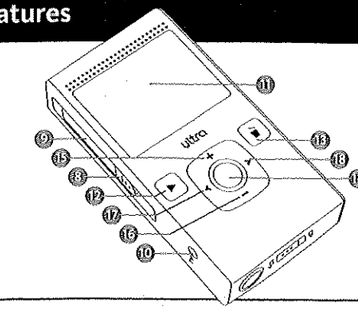

1	Power Switch		Press to turn on/off.
2	Wrist Strap Hook		Attach wrist strap, included in package.
3	Battery Latch		Slide to lock/unlock.
4	Tripod Mount		Attach a tripod or other Flip Video accessory. Learn more at www.theflip.com/accessories.
5	Lens		Wipe clean with a soft, dry cloth.
6	Recording Light		Red light turns on during recording or charging.
7	Microphone		Built-in wide-range microphone.
8	USB Latch		Slide down to release USB arm.
9	USB Arm		If space does not permit proper connection, use a USB "A"-type extension cable.
10	TV Output Port		Connect TV cable, included in package.
11	Screen		Recording viewfinder/playback screen.
12	Play Button	▷	Press to play/pause. Press and hold to play all.
13	Delete Button		Press to delete. Press and hold to lock/unlock the delete button.
14	Record Button	●	Press and release to start/stop recording. **During Power On:** Hold to return to camcorder setup.
15	Up Button	+	**While Recording:** Press to zoom in. **During Playback:** Press to increase volume.
16	Down Button	−	**While Recording:** Press to zoom out. **During Playback:** Press to decrease volume.
17	Left Button	<	**While Paused:** Press to skip to previous video. **During Playback:** Press and hold to rewind.
18	Right Button	>	**While Paused:** Press to skip to next video. **During Playback:** Press and hold to fast-forward.